REVISION HISTORY					
REV	SHT	DESCRIPTION	DATE	ECN	CHECKED
A	ALL	RELEASE NEW	4/12/08	NEW	JFM

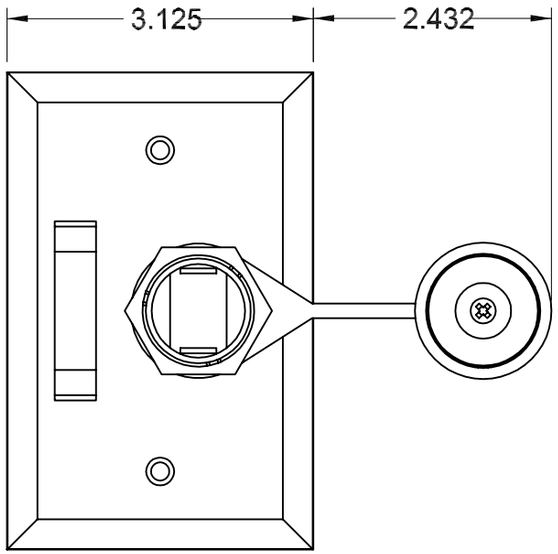

FRONT VIEW

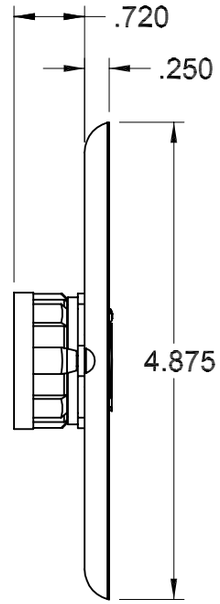

RIGHT SIDE

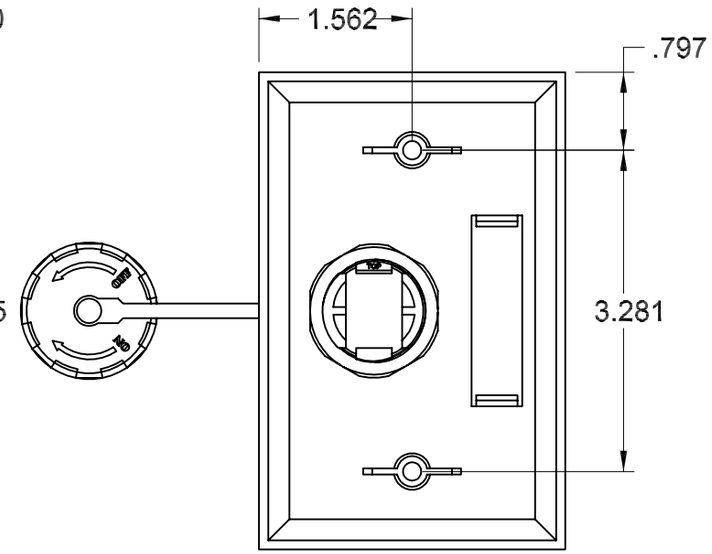

REAR VIEW

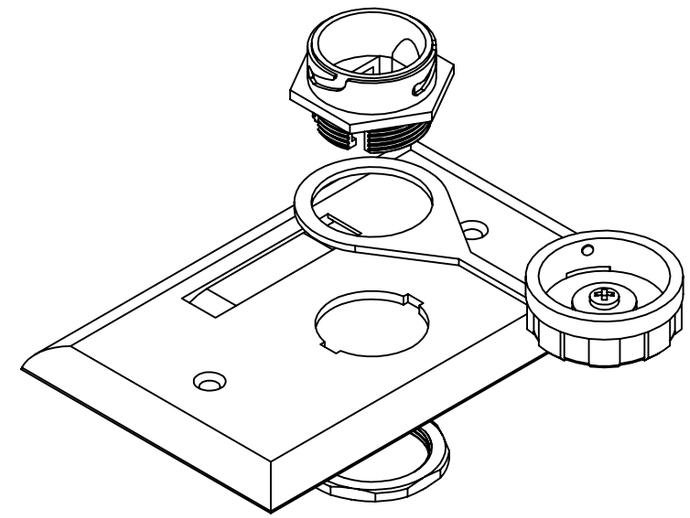

ISOMETRIC VIEW

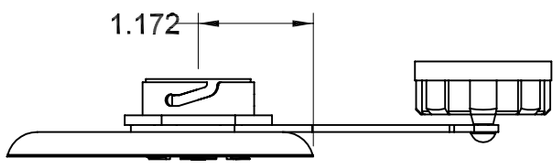

BOTTOM VIEW

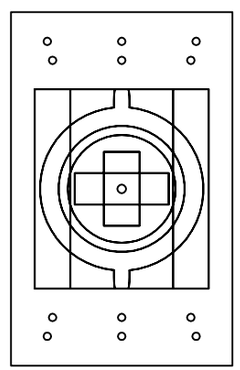

REMOVABLE PORTIONS OF GASKET MAY VARY FROM THAT SHOWN IN THIS VIEW

NOTES: UNLESS OTHERWISE SPECIFIED.

1. "XX" IN PART NUMBER DESIGNATES COLOR.
   WHERE: 00 = ELEC. IVORY
   01 = OFFICE WHITE
   12 = BRIGHT WHITE

2. FACEPLATE ASSY PROVIDED WITH (1 each) MOUNTING HARDWARE KIT, SCREWS ARE PAINTED PER COLOR TO MATCH FACEPLATE.

UNCONTROLLED COPY

FPWR01XX	FACEPLATE, INDUSTRIAL, WATER RESISTANT, 1 PORT, "COLOR"
OCC PART NO.	DESCRIPTION

UNLESS OTHERWISE SPECIFIED DIMENSIONS ARE IN INCHES.
TOLERANCES: FRACTIONS ±1/32"
ANGLES ±1/2°
3 PLACE DECIMALS ±.005"
2 PLACE DECIMALS ±.01"

THIS DRAWING AND THE DESIGN SHOWN ARE THE PROPERTY OF OPTICAL CABLE CORPORATION AND MAY NOT BE USED AS THE BASIS FOR MANU–FACTURE OR SALE WITHOUT SPECIFIC WRITTEN PERMISSION OF OPTICAL CABLE CORPORATION.

OPTICAL CABLE CORPORATION
5290 Concourse Drive
Roanoke, VA 24019
Phone: 800-622-7711
Fax: 540-265-0724
www.occfiber.com

DRAWN	J.YANIK	DATE	4/12/08
CHECKED	J.MALTAIS	DATE	4/14/08
ENGINEER	J.YANIK	DATE	4/12/08
APPROVED	J.HOWE	DATE	4/14/08
PREVIOUS DWG			
NEXT DWG		FILENAME	C108725A.DFT

THIRD ANGLE PROJECTION

MATERIAL
SEE BILL OF MATERIAL

FINISH
SEE NOTES; FOR COLOR
SEE OCC SPEC# 100004

CRITICAL DIMENSION CODE
(FF) = FUNCTION
(M) = MATING
(A) = AUDIT

DWG TITLE FACEPLATE ASSY, 1 PORT, WATER RESISTANT, INDUSTRIAL

SIZE	DWG NO.	REV
B	C108725	A

SCALE: NONE SHEET 1 OF 1