REVISION HISTORY					
REV	SHT	DESCRIPTION	DATE	ECN	CHECKED
A	ALL	RELEASE NEW	2/25/04	NEW	RBS
B	-	CHGD: PLATE FROM ALUMINUM TO GLASS FILLED PLASTIC	5/22/06	-	DAH
C	-	REMOVED: SPANNER NUTS FROM EIGHT PLACES	9/10/07	-	DAH

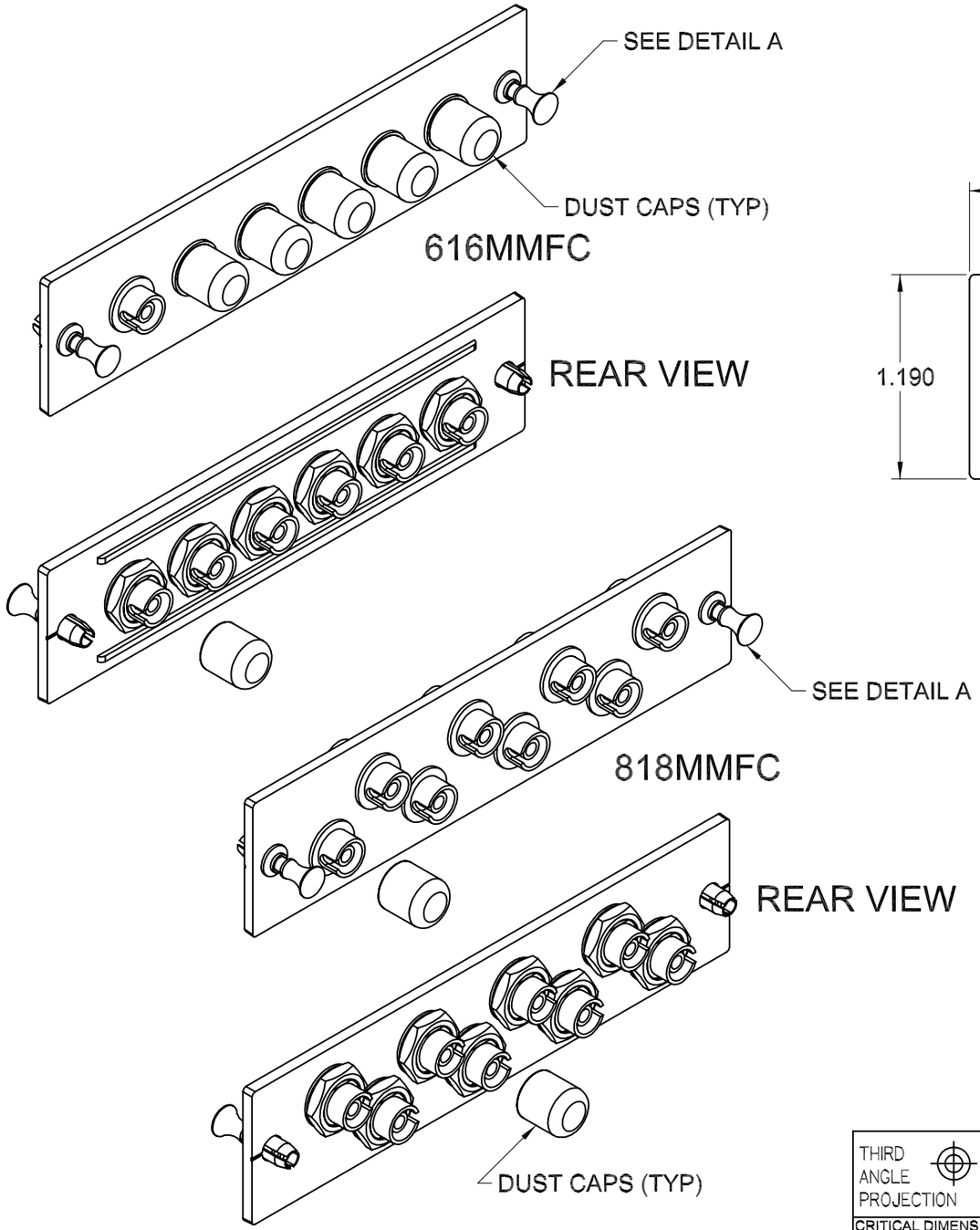

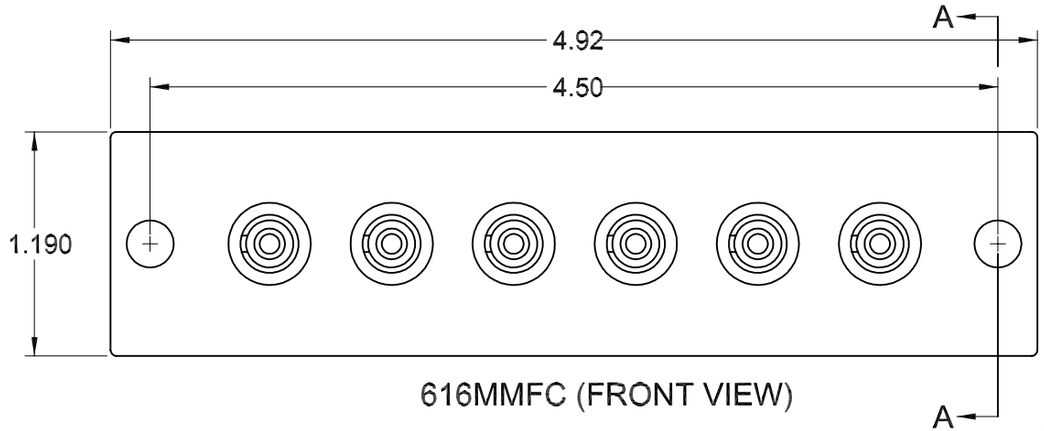

616MMFC (FRONT VIEW)

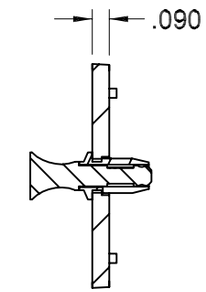

DETAIL A
GROMMET/PLUNGER
ORIENTATION

NOTES: UNLESS OTHERWISE SPECIFIED.

1. EACH FIBER ADAPTER KIT IS SUPPLIED WITH COMPONENTS SHOWN.
2. ADAPTER SPECIFICATIONS (MULTIMODE) 50µm, 50µm 10 GIG, 62.5µm
   INSERTION LOSS (AVERAGE): PHOSPHOR BRONZE SLEEVE: ≤0.3 dB MAX.
   SLEEVE/FERRULE WITHDRAWAL FORCE: 2.0N ~ 5.9N (200gf ~ 600gf)
3. ADAPTER SPECIFICATIONS (SINGLEMODE)
   INSERTION LOSS (AVERAGE): ZIRCONIA CERAMIC SLEEVE: ≤0.2 dB MAX.
   SLEEVE/FERRULE WITHDRAWAL FORCE: 2.0N ~ 5.9N (200gf ~ 600gf)

OPTICAL PART NO.	DESCRIPTION
818MMFC	ADAPTER PLATE ASSY, FC, MM, 8 PORT, OCC
616MMFC	ADAPTER PLATE ASSY, FC, MM, 6 PORT, OCC

UNCONTROLLED COPY

UNLESS OTHERWISE SPECIFIED DIMENSIONS ARE IN INCHES.
TOLERANCES: FRACTIONS ±1/32"
ANGLES ±1/2°
3 PLACE DECIMALS ±.005"
2 PLACE DECIMALS ±.01"

THIS DRAWING AND THE DESIGN SHOWN ARE THE PROPERTY OF OPTICAL CABLE CORPORATION AND MAY NOT BE USED AS THE BASIS FOR MANU–FACTURE OR SALE WITHOUT SPECIFIC WRITTEN PERMISSION OF OPTICAL CABLE CORPORATION.

OPTICAL CABLE CORPORATION
5290 Concourse Drive
Roanoke, VA 24019
Phone: 800-622-7711
Fax: 540-265-0724
www.occfiber.com

THIRD ANGLE PROJECTION

MATERIAL
SEE BILL OF MATERIAL

FINISH
SEE NOTES

CRITICAL DIMENSION CODE
(F) = FUNCTION
(M) = MATING
(A) = AUDIT

DRAWN	D.A.HOLBERT	DATE	2/25/04
CHECKED	R.B.SMITH	DATE	2/27/04
ENGINEER	J.YANIK	DATE	2/25/04
APPROVED	R.B.SMITH	DATE	5/22/06
PREVIOUS DWG			
NEXT DWG		FILENAME	C106622C.DFT

DWG TITLE
CUSTOMER DRAWING,
ADAPTER PLATE ASSY,
FC, MM, 6 & 8 PORT, OCC

SIZE B | DWG NO. C106622 | REV C

SCALE: NONE | SHEET 1 OF 1