REVISION HISTORY					
REV	SHT	DESCRIPTION	DATE	ECN	CHECKED
A	ALL	RELEASE NEW	2/29/08	NEW	JFM

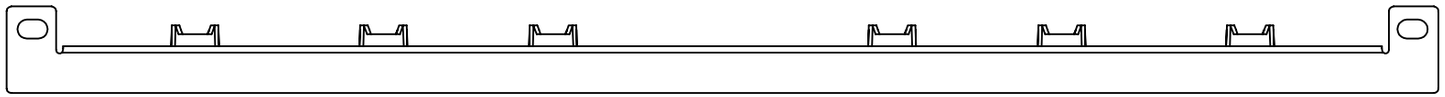

CABLE MGMT BAR

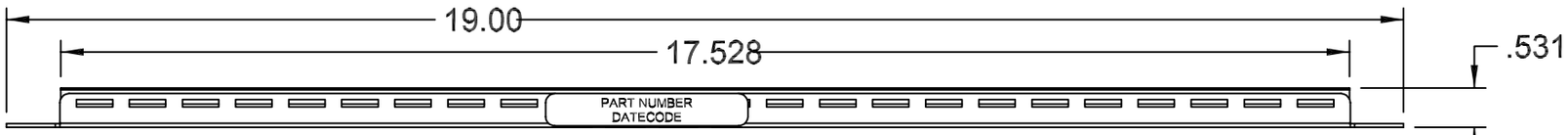

TOP VIEW

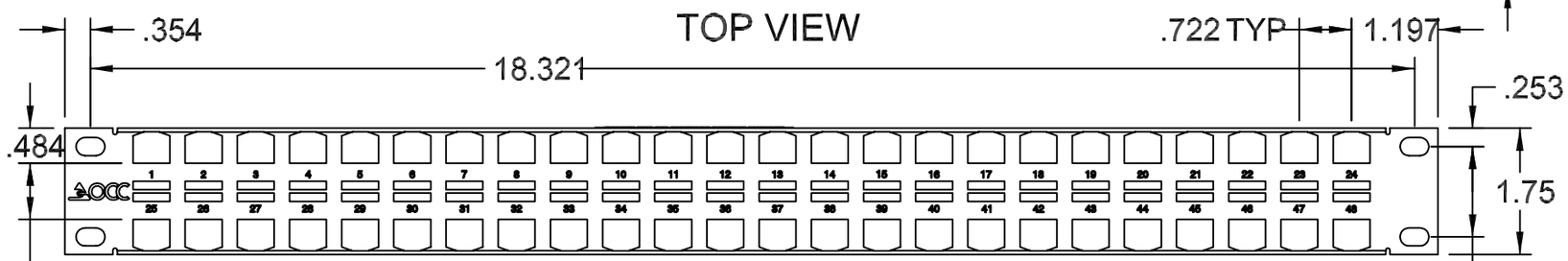

FRONT VIEW

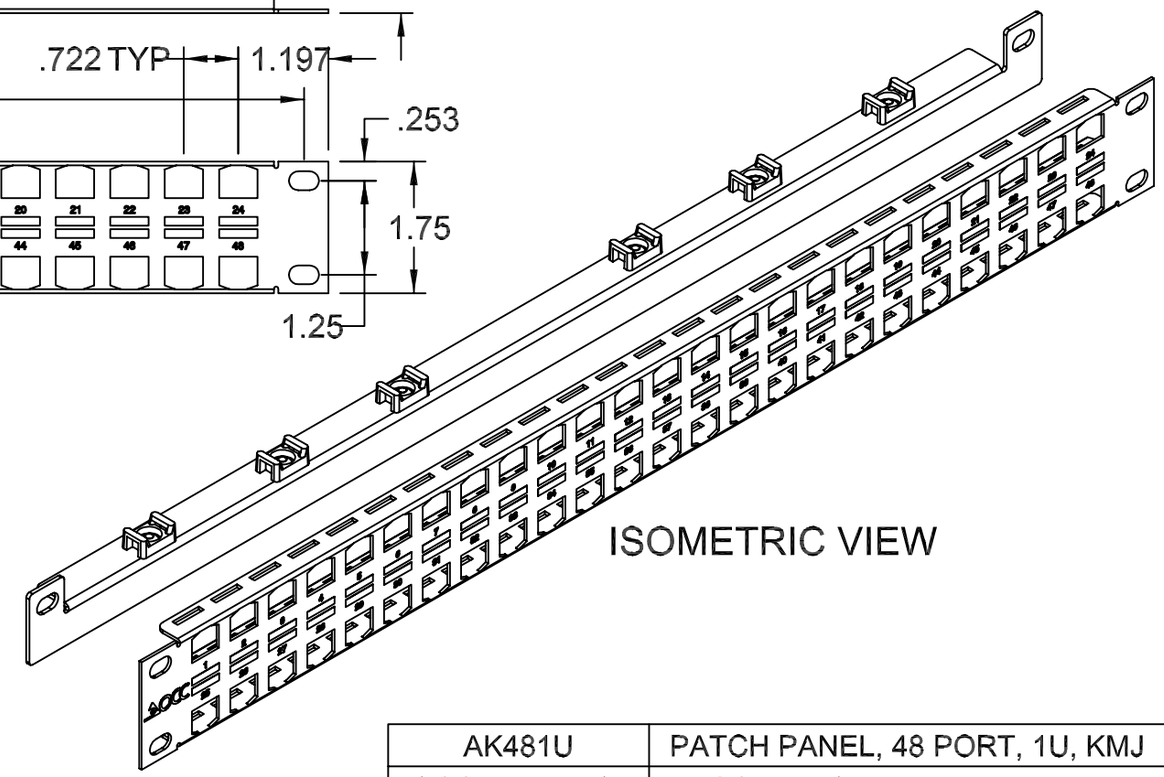

ISOMETRIC VIEW

AK481U	PATCH PANEL, 48 PORT, 1U, KMJ
OCC PART NO.	DESCRIPTION

NOTES: UNLESS OTHERWISE SPECIFIED.

1. ANY CHANGES TO DESIGN REQUIRES CUSTOMER NOTIFICATION BY SMP.

UNCONTROLLED COPY

UNLESS OTHERWISE SPECIFIED DIMENSIONS ARE IN INCHES.
TOLERANCES: FRACTIONS ±1/32"
ANGLES ±1/2°
3 PLACE DECIMALS ±.005"
2 PLACE DECIMALS ±.01"

THIS DRAWING AND THE DESIGN SHOWN ARE THE PROPERTY OF OPTICAL CABLE CORPORATION AND MAY NOT BE USED AS THE BASIS FOR MANUFACTURE OR SALE WITHOUT SPECIFIC WRITTEN PERMISSION OF OPTICAL CABLE CORPORATION.

THIRD ANGLE PROJECTION

MATERIAL
SEE BILL OF MATERIAL

FINISH
SEE BILL OF MATERIAL

CRITICAL DIMENSION CODE
(F) = FUNCTION
(M) = MATING
(A) = AUDIT

DRAWN	J.YANIK	DATE	2/29/08
CHECKED	J.MALTAIS	DATE	2/29/08
ENGINEER	J.YANIK	DATE	2/29/08
APPROVED	J.HOWE	DATE	2/29/08
PREVIOUS DWG			
NEXT DWG		FILENAME	C108643A.DFT

OPTICAL CABLE CORPORATION
33 Superior Way
Swannanoa, NC 28778
Phone: 828-298-2260
Fax: 828-298-2487
www.occfiber.com

DWG TITLE
KEYSTONE STYLE,
48 PORT, 1U PANEL

SIZE	DWG NO.	REV
B	C108643	A

SCALE: NONE SHEET 1 OF 1