"OPTICAL CABLE CORPORATION (OCC) RESERVES THE RIGHT TO REVISE ANY AND ALL DESIGN SPECIFICATIONS."

UNCONTROLLED COPY

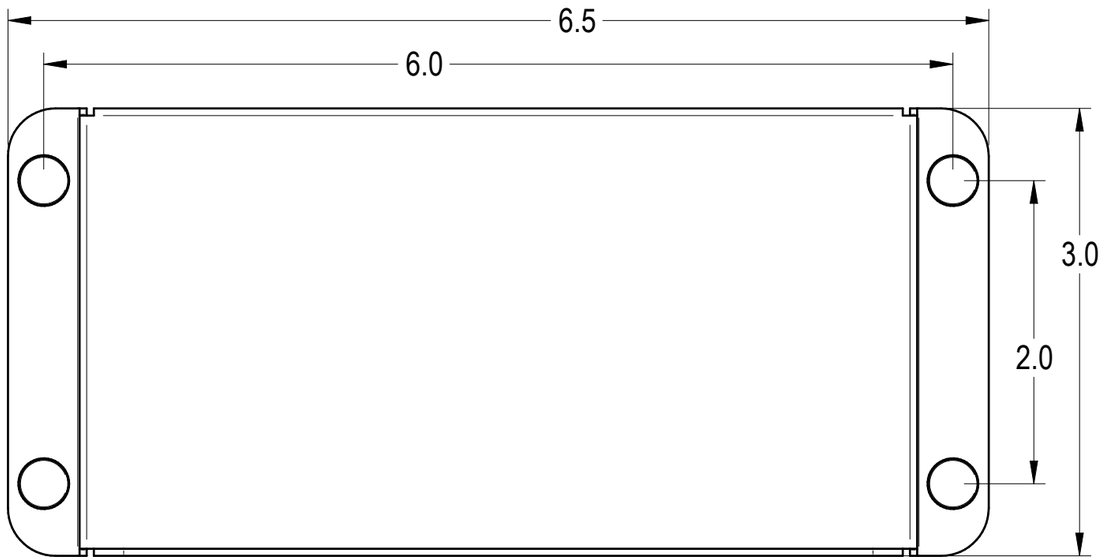

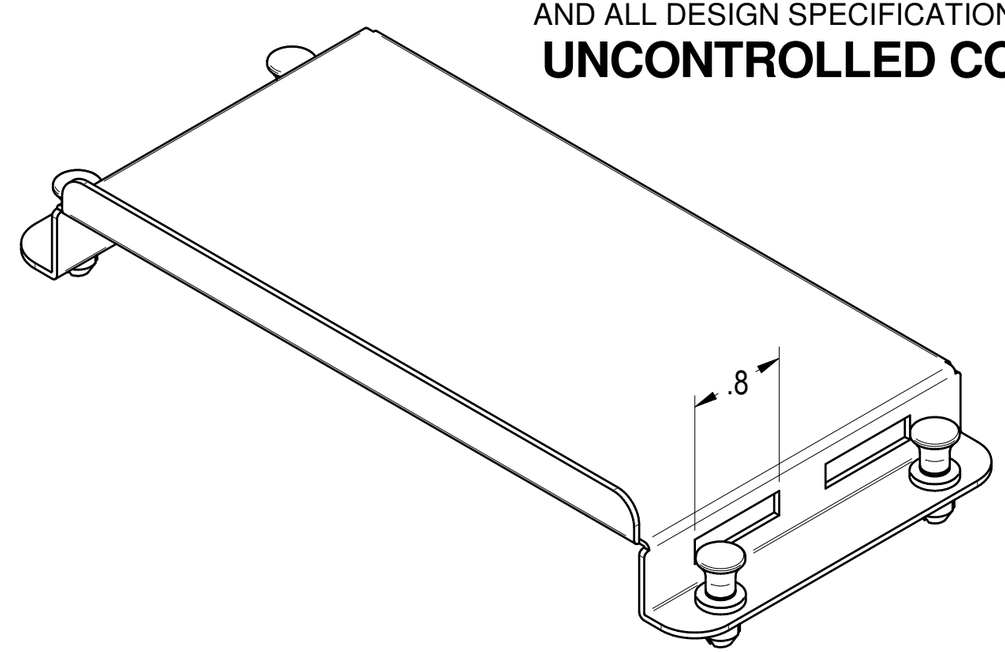

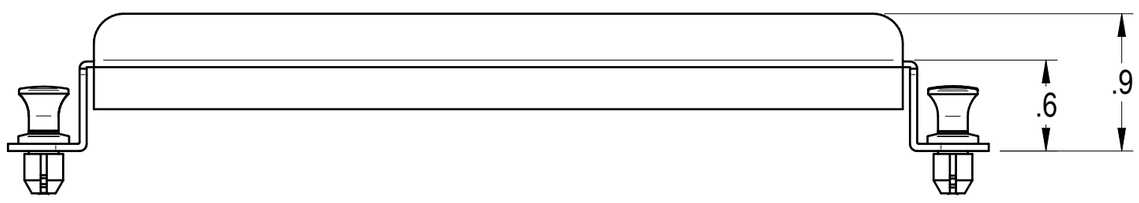

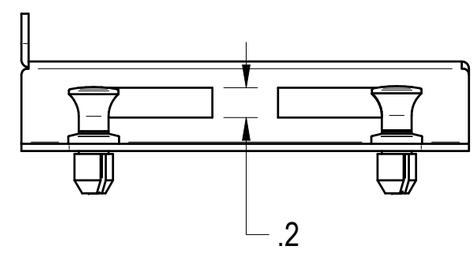

FEATURES:

- ACCOMODATES MODEMS, ROUTERS, SWITCHES, OR ONT DEVICES
- VERSATILE 500MM LONG HOOK AND LOOP MOUNTING STRAP (INCLUDED)
- PUSH-PIN FASTENERS FOR QUICK AND EASY MOUNTING TO MSDE15P AND MSDE30P ENCLOSURES

MSDEP-NBKT	NETWORK MTG BRACKET, MSDE
OCC PART NUMBER	DESCRIPTION

UNCONTROLLED COPY

UNLESS OTHERWISE SPECIFIED DIMENSIONS ARE IN INCHES.
TOLERANCES: FRACTIONS ±1/32"
ANGLES ±1/2°
3 PLACE DECIMALS ±.005"
2 PLACE DECIMALS ±.01"

THIS DRAWING AND THE DESIGN SHOWN ARE THE PROPERTY OF OPTICAL CABLE CORPORATION AND MAY NOT BE USED AS THE BASIS FOR MANUFACTURE OR SALE WITHOUT SPECIFIC WRITTEN PERMISSION OF OPTICAL CABLE CORPORATION.

OPTICAL CABLE CORPORATION
5290 Concourse Drive
Roanoke, VA 24019
Phone: 800-622-7711
Fax: 540-265-0724
www.occfiber.com

THIRD ANGLE PROJECTION

MATERIAL
BRACKET: STEEL
PUSH-PINS: PLASTIC

FINISH
BLACK

CRITICAL DIMENSION CODE
(F) = FUNCTION
(M) = MATING
(A) = AUDIT

DRAWN	C. MILLER	DATE	1/28/19
CHECKED		DATE	
ENGINEER	C. MILLER	DATE	1/28/19
APPROVED	J. CALLOWAY	DATE	1/31/19
PREVIOUS DWG			
NEXT DWG		FILENAME	C113199A.dft

DWG TITLE
NETWORK MTG BRACKET, MSDE

SIZE	DWG NO.	REV
B	C113199	A

SCALE: NONE
SHEET 1 OF 1